INSTRUCTION MANUAL

EXTRA 300 - 120S

ALMOST-READY-TO-FLY ARF

1.20 cu.in. displacement 2-cycle

Radio required : 4 channels, 5 servos airplane radio

Specifications

Wing Span	69.0in / 1745mm
Wing Area	845 sq in / 54.5 sq dm
Flying Weight	10.0 lbs / 4546g
Fuselage Length	61.4 in / 1560mm

* Specifications are subject to change without notice.*

Warning !This model is not a toy.

It is designed for maximum performance. Please seek advice if one is not familiar with this kind of engine powered precision model. Operating this model without prior preparation may cause injuries. Remember, safety is the most important thing. Always keep this instruction manual at hand for quick reference.

THE WORLD MODELS MFG. CO., LTD.

THE WORLD MODELS MANUFACTURING CO., LTD.
FACTORY PRE-FABRICATED
ALMOST-READY-TO-FLY (ARF) SERIES
MADE IN CHINA
www.theworldmodels.com

EXTRA 300 - 120S

INDEX

BEFORE YOU BEGIN

1. Read through the manual before you begin, so you will have an overall idea of what to do.

2. Check all parts. If you find any defective or missing parts contact your local dealer. Please DRY FIT and check for defects for all parts that will require CA or Epoxy for final assembly. Any parts you find to be defective after the gluing process may be difficult to remove for warranty replacement. The manufacturer will replace any defective parts. but will be difficult to extend to the good parts that are good before gluing to defective parts during assembly.

3. Symbols used throughout this instruction manual comprise of the following : -

AB — Apply epoxy glue.

C.A — Apply instant glue (C.A.glue, super glue.)

L/R — Assemble left and right sides the same way.

Ensure smooth non-binding movement while assembling.

Peel off shaded portion covering film.

Cut off shaded portion.

3mm — Drill holes with the specified diameter (here: 3mm).

N.I. — Must be purchased separately!

! — Pay close attention here!

! Warning! — Do not overlook this symbol!

Pierce the shaded portion covering film.

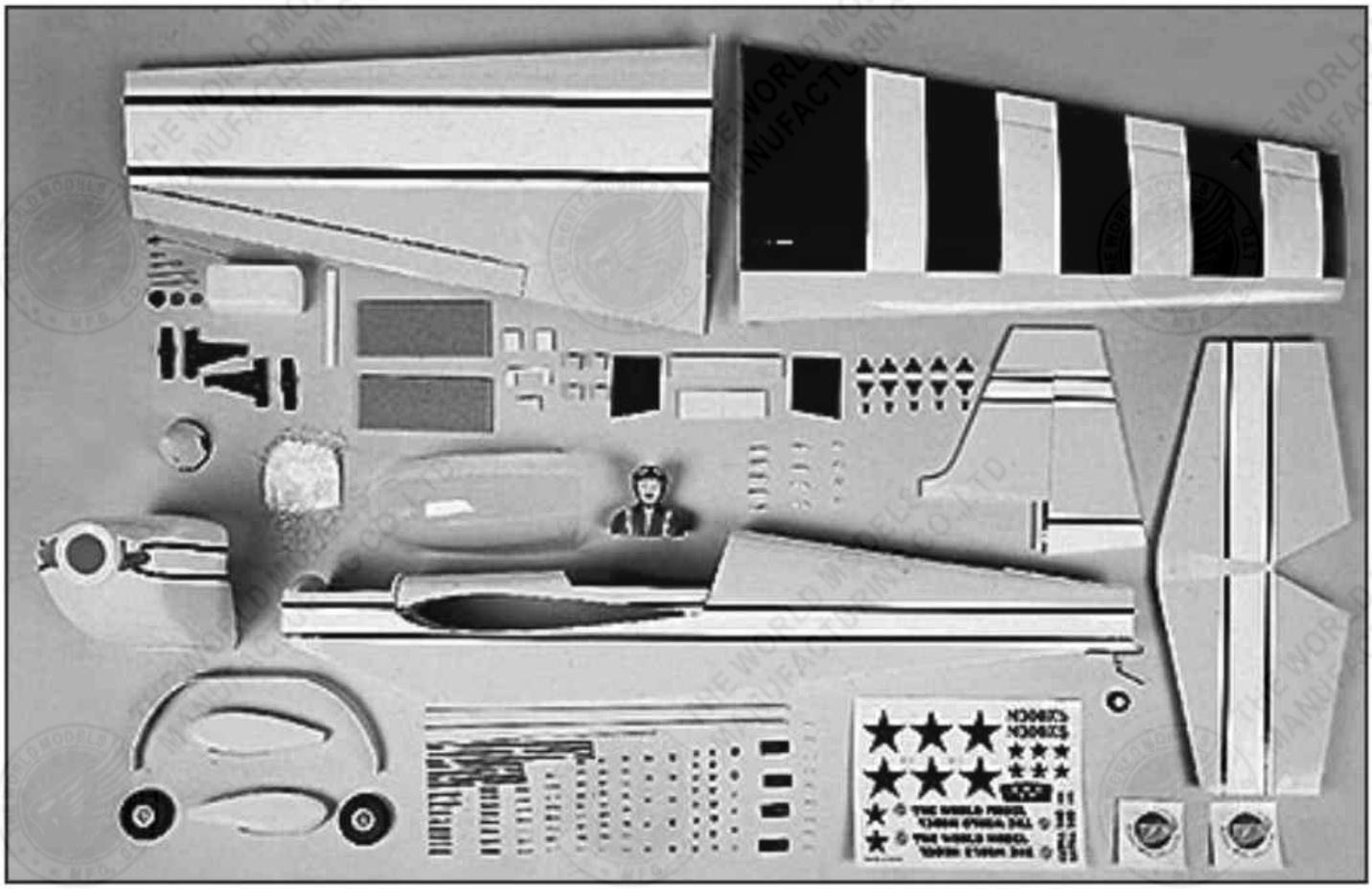

Parts List

1. FUSELAGE – 1 pc

2. MAIN WING – 1 pair

3.STABILIZER & ELEVATOR – 1 set

4.VERTICAL FIN & RUDDER – 1 set

5.CANOPY – 1 pc

6.PILOT (#PC001102) – 1 pc

7.COWLING – 1 pc.
TRANSPARENT DUMMY COWLING – 1 pc

8.SPINNER Ø76mm – 1 pc

9.ENGINE MOUNT PL5000-070 – 1 set

10.FUEL TANK 450cc – 1 set

11.SPONGE 10x80x200mm (For Radio Equipment) – 2 pcs

12.MAIN LANDING GEAR (4x45x560mm) – 1 pc

13.TAIL LANDING GEAR – 1 set

14.MAIN WHEEL COVER – 1 pair

15.MAIN WHEEL Ø76mm – 2 pcs

16.TAIL WHEEL Ø30mm – 1 pc

17.PUSHROD:–
WOODEN ROD Ø8x550mm (For Elevator & Rudder Servo) – 2 pcs
METAL ROD Ø2x145mm (For Elevator & Rudder Servo) – 2 pcs
METAL ROD Ø2x150mm w/Threads (For Elevator & Rudder Servo) – 2 pcs
METAL ROD Ø2x250mm w/Threads
(For Elevator & Rudder Servo) – 2 pcs
METAL ROD Ø2x255mm w/Theads (For Elevator Servo) – 1 pc

18.THROTTLE PUSHWIRE Ø1.2x350mm
w/Plastic tube d2xD3x200mm – 1 set

19.WOODEN PARTS:–
BALSA 8x18x21mm (For Aileron Servo) – 4 pcs
COCKPIT – 1 set
PLYWOOD 2x70x90mm (Aileron Servo Cover) – 2 pcs
PLYWOOD 3x15x145mm (For Fixing Fuel Tank) – 1 pc
PLYWOOD 3x25x30mm (For Landing Gear Cover) – 2 pcs
PLYWOOD 3x40x130mm (Wing Protection) – 1 pc
THROTTLE SERVO TRAY – 1 set
WOODEN 9x34.2x166mm (Wing Joiner) – 1 pc

20.PLASTIC PARTS:–
Clevis – 5pcs
COLLAR 5.1mm – 4 pcs
FIBER GLASS – 2 pcs
STRAPER – 4 pcs
TRI-HORN 3x9mm(L) – 2 sets
TRI-HORN 3x14mm(L) – 3 sets

21.METAL PARTS:–
ADJUSTER 2.1mm – 1 set
COLLAR 2.1mm w/set screw – 1 set
COLLAR 5.1mm w/set screw – 2 sets
NUT 4mm – 8 pcs
NUT 5mm – 2 pcs
SCREW PA3x8mm – 6 pcs
SCREW PA3x10mm – 2 pcs
SCREW PM2x16mm – 3 pcs
SCREW PM2x20mm – 12 pcs
SCREW PM4x25mm – 8 pcs
SCREW PM4x30mm – 4 pcs
SCREW PM5x45mm – 2 pcs
SCREW PM4x35mm – 2 pcs
SCREW PWA2.6x12mm – 8 pcs
SCREW PWA2.3x8mm – 4 pcs
SCREW PWA2.3x12mm – 10 pcs
WASHER 4mm – 10 pcs
WASHER 5mm – 2 pcs
WASHER d3xD7mm – 4 pcs

22.FUEL TUBE Ø6x5mm – 9 pcs
HEAT-SHRINK TUBE Ø8x40mm – 4 pcs

23.FUSELAGE STICKER & LOGO – 1set
P/N:ST200 005

24.COVERED WITH HAND IRON-ON COVERING FILM – 2pcs

1 Main Wing

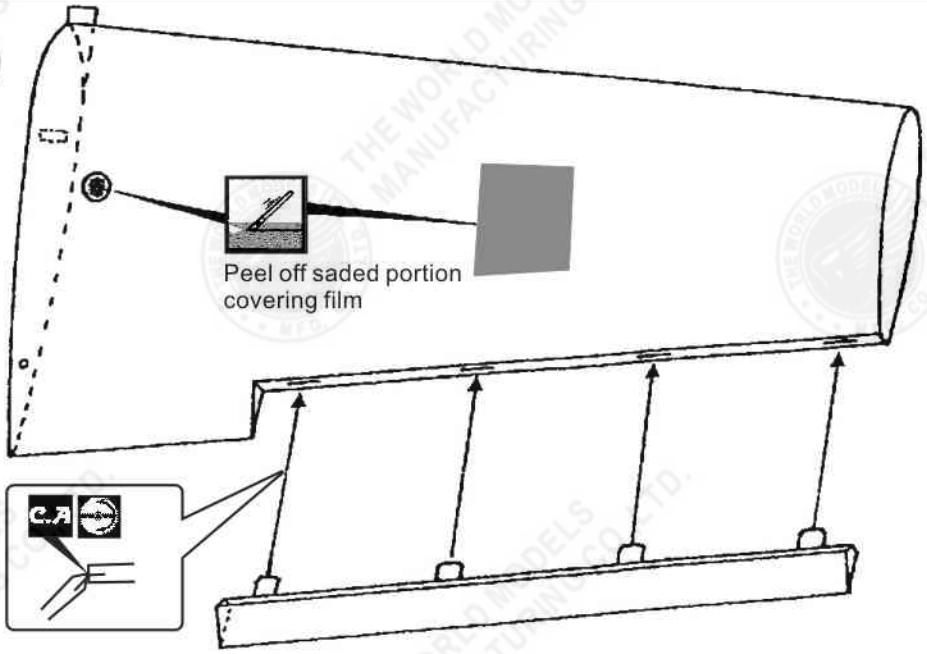

2 Main Wing

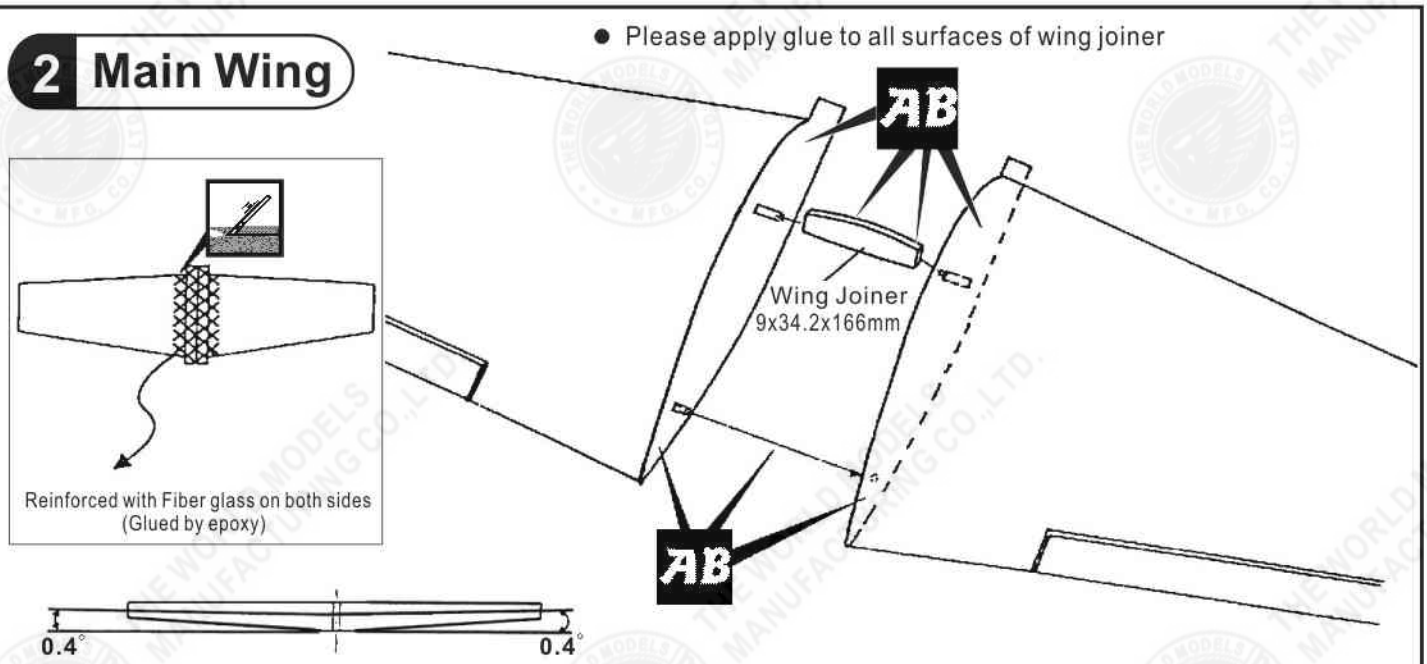

3 Aileron Servo

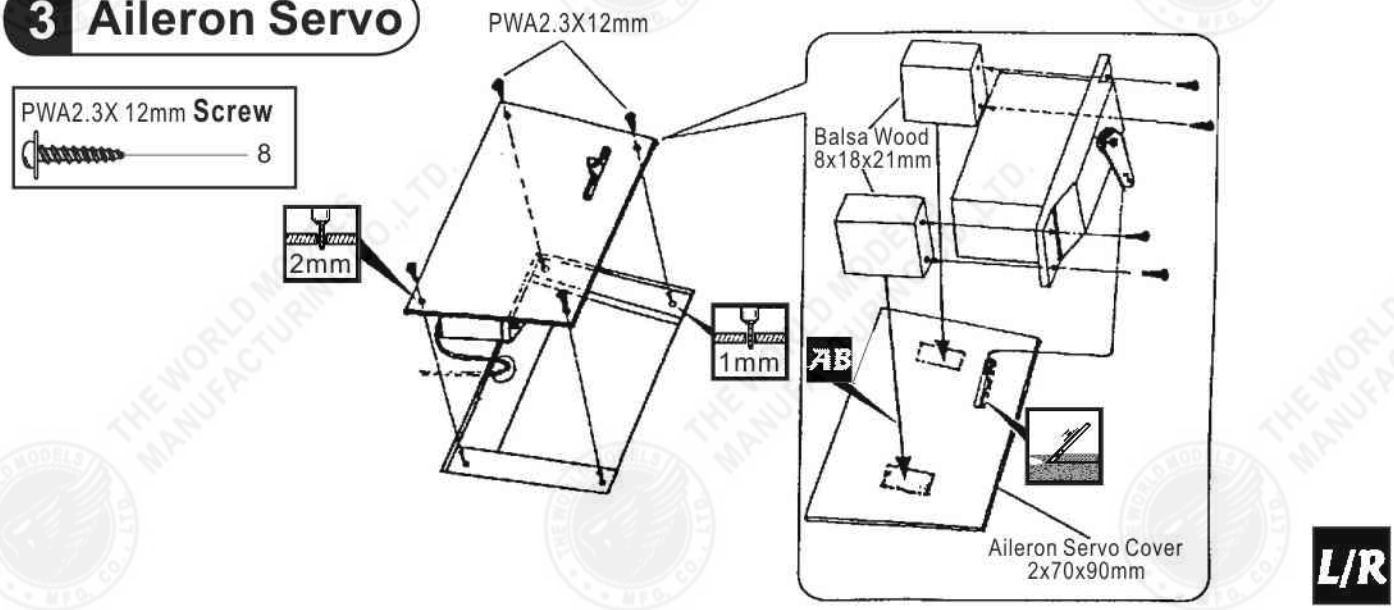

4 Aileron Servo

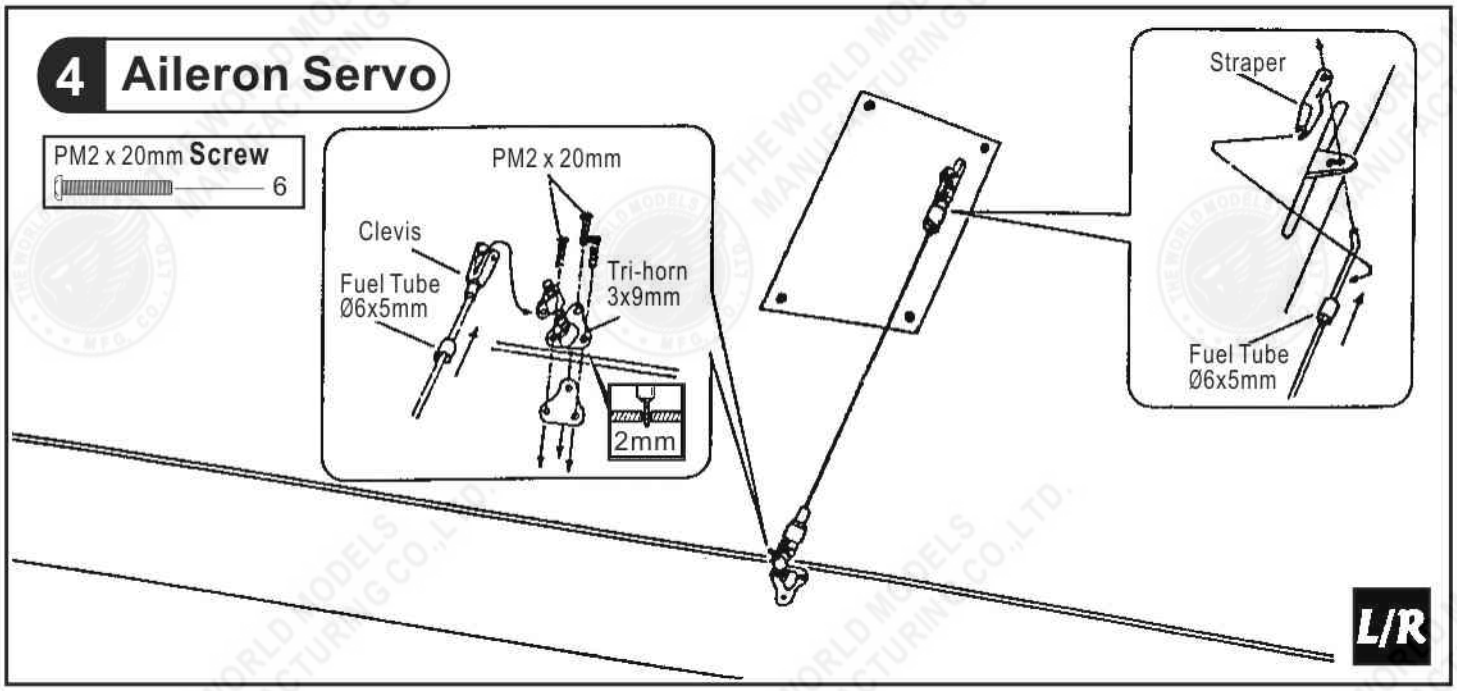

5 Stabilizer

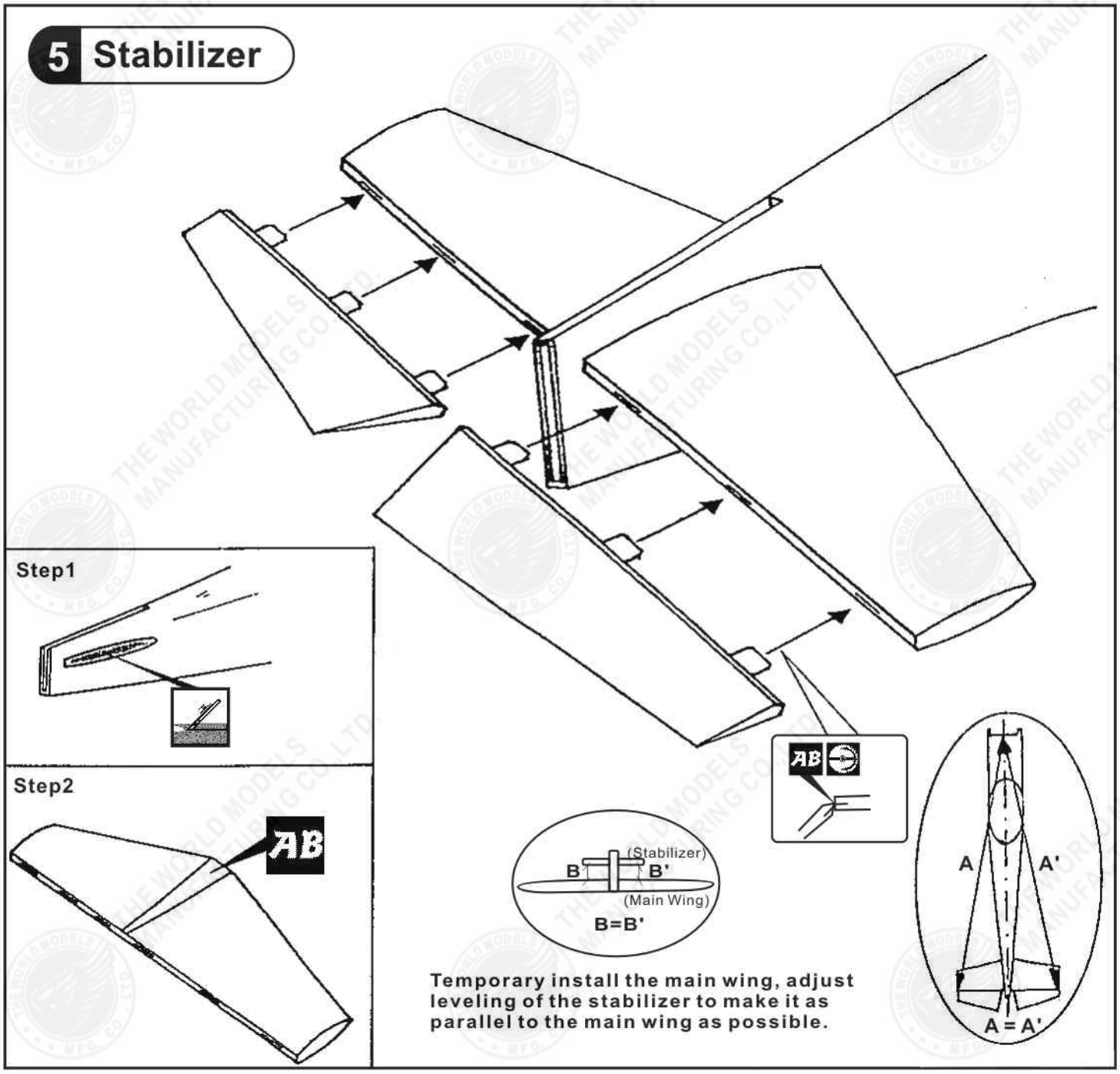

Temporary install the main wing, adjust leveling of the stabilizer to make it as parallel to the main wing as possible.

6 Vertical Fin/Rudder

PA3 x 8mm **Screw** — 2
3 X 3mm **Set Screw** — 1
2.1mm **Collar** — 1

A
A'
A = A'

AB
AB
AB
2mm
C
1mm
PA3 x 8 mm
2.1mm **Collar**
3 X 3mm **Set Screw**

7 Fuel Tank

PWA2.3X 12mm **Screw** — 2

PWA2.3X 12mm
Fuel Tank 450cc
1.5mm

Install Plywood 3x15x145mm
(For fixing fuel tank)
Fuel Tank
● **Completed**

8 Engine Mount

PM4 x 25mm **Screw** — 4
4mm **Washer** — 4

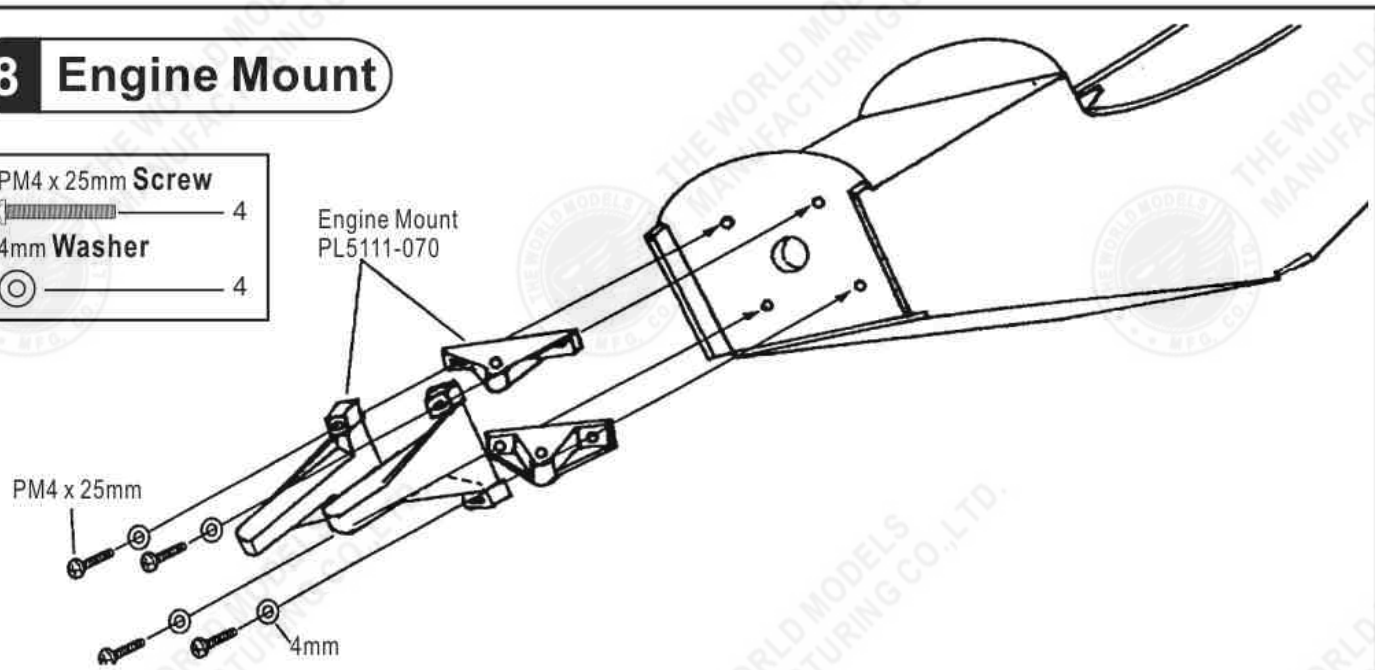

9 Engine

PM4 x 30mm **Screw** — 4
4mm **Washer** — 4
4mm **Nut** — 8

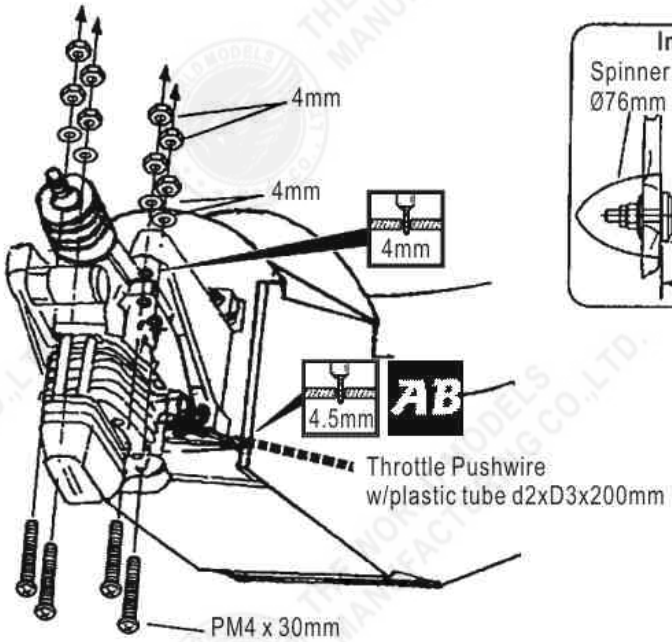

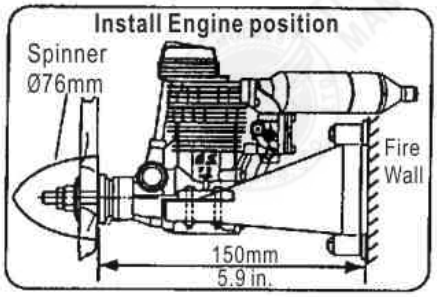

10 Cowling

PWA2.6X 12mm **Screw** — 8

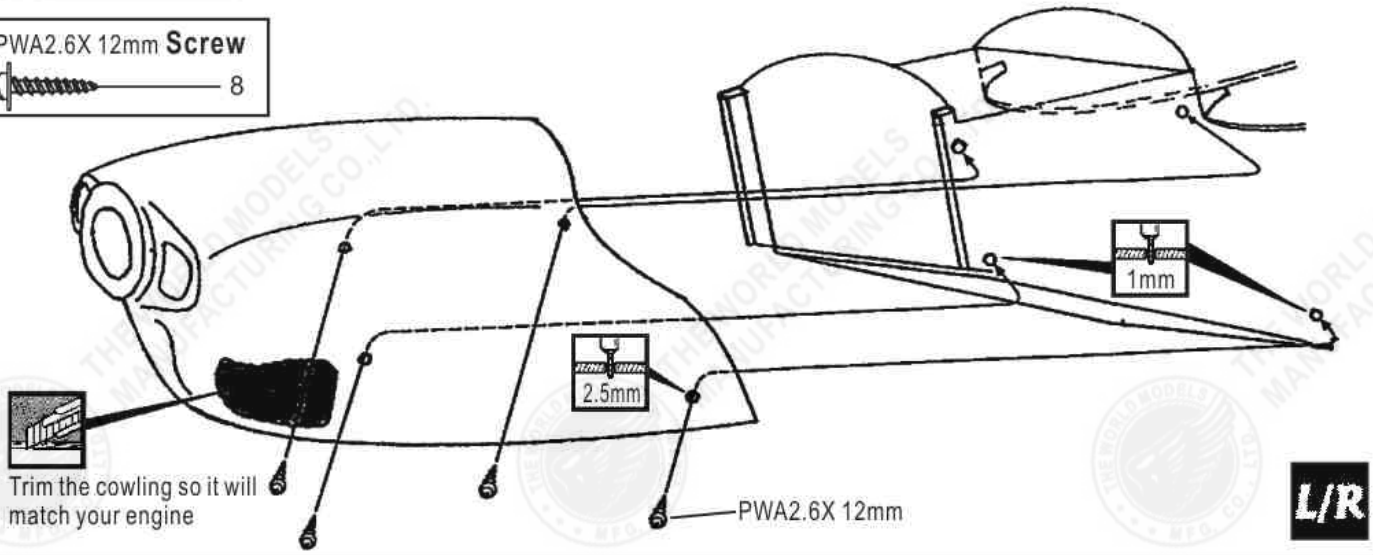

11 Rudder Pushrod

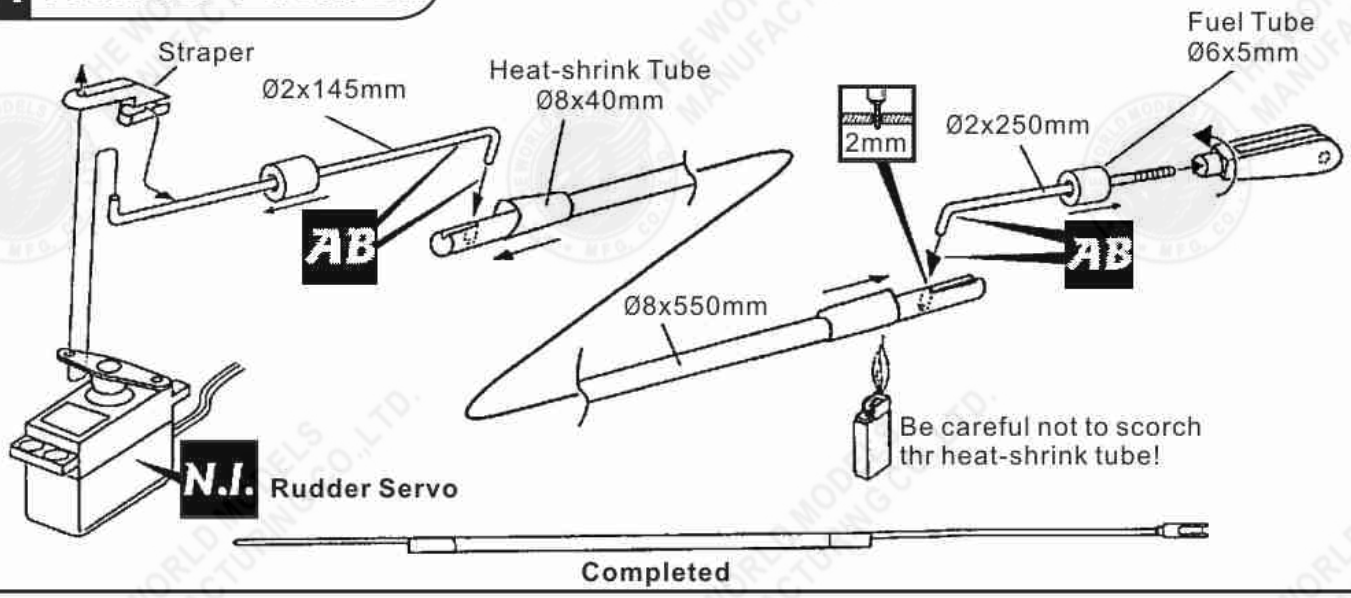

12 Elevator Pushrod

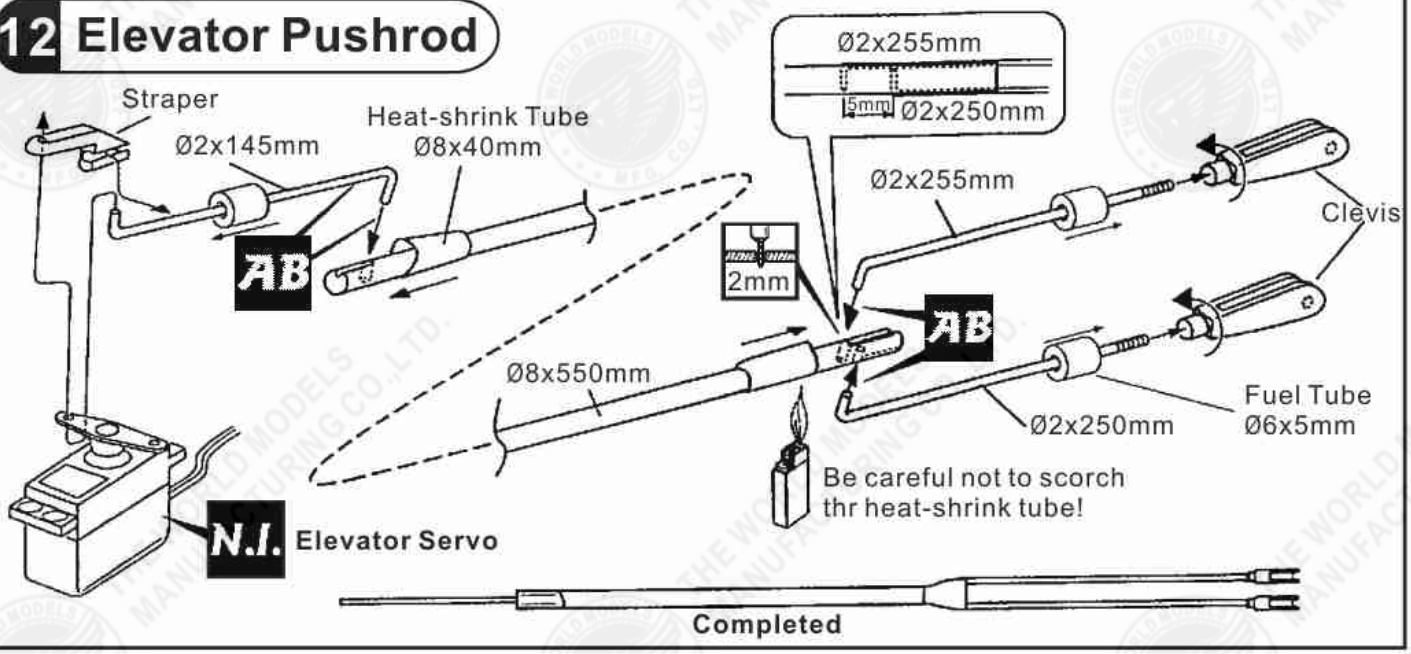

13 Servo Set

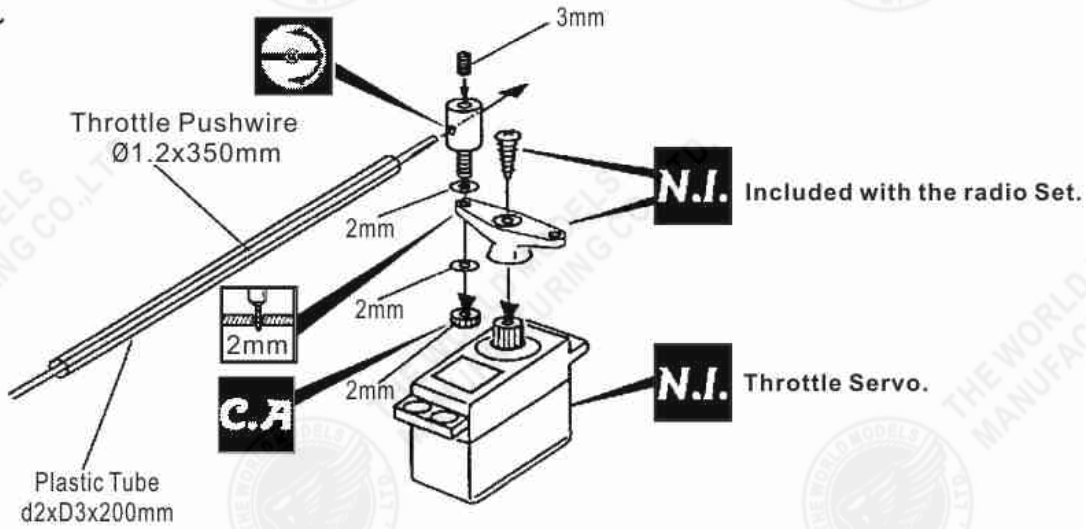

14 Radio Equipment

● Install and arrange the servo as shown in the diagram.

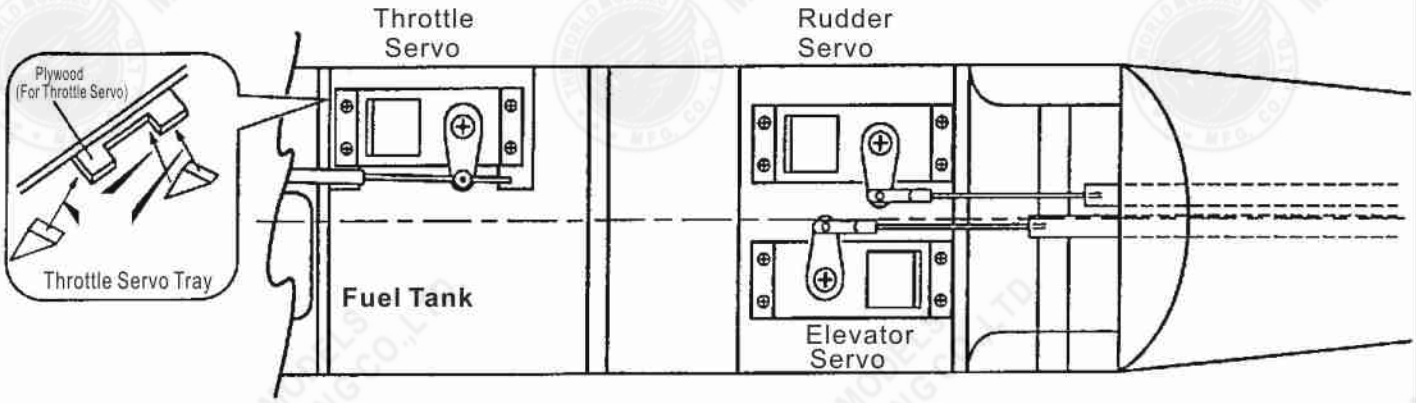

● Top View

15 Linkage

PM2 x 16mm **Screw** — 3
PM2 x 20mm **Screw** — 6

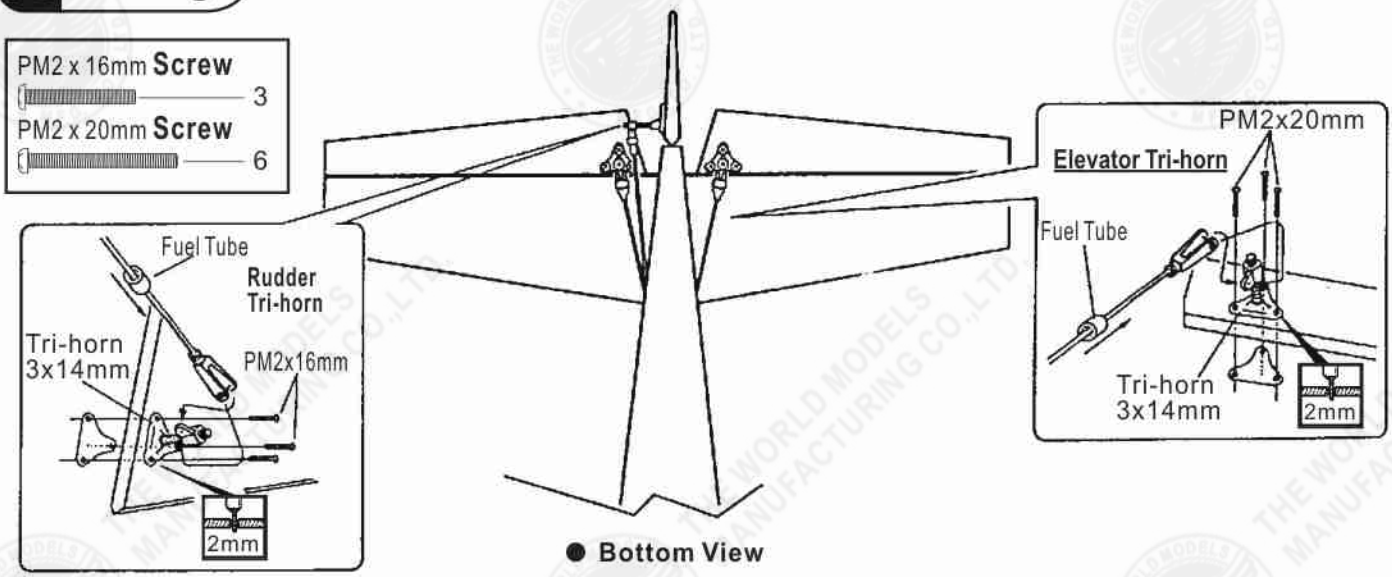

● Bottom View

16 Landing Gear

PM4 x 25mm **Screw** — 4

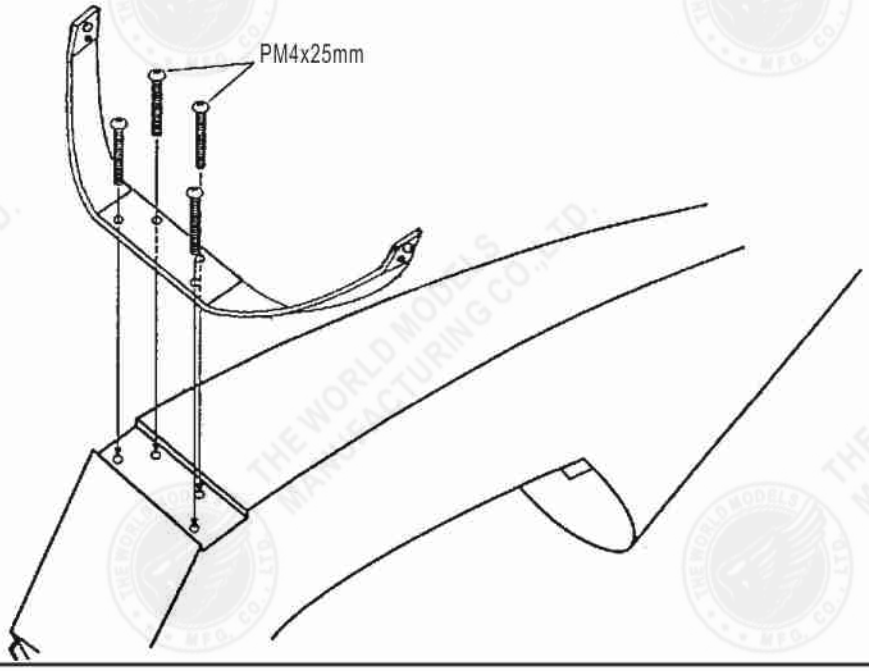

17 Landing Gear

PA3 x 10mm **Screw**	2
5mm **Washer**	2
5mm **Nut**	2
5.1mm **Plastic Collar**	4
3mm **Set Screw**	2
5.1mm **Collar**	2
PM5 x 45mm **Screw**	2

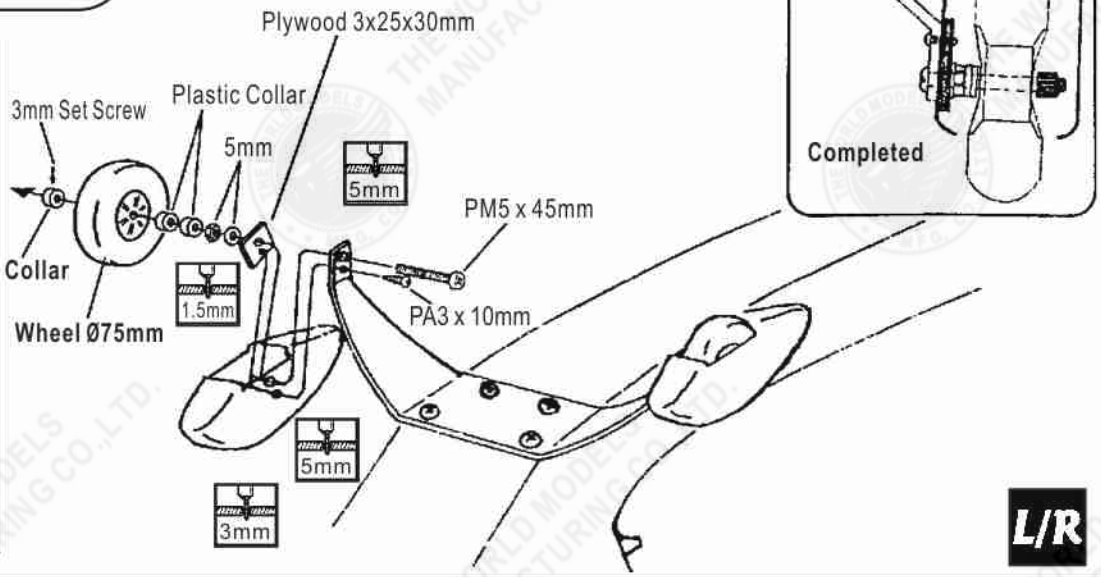

18 Main Wing

PM4 x 35mm **Screw**	2
4mm **Washer**	2

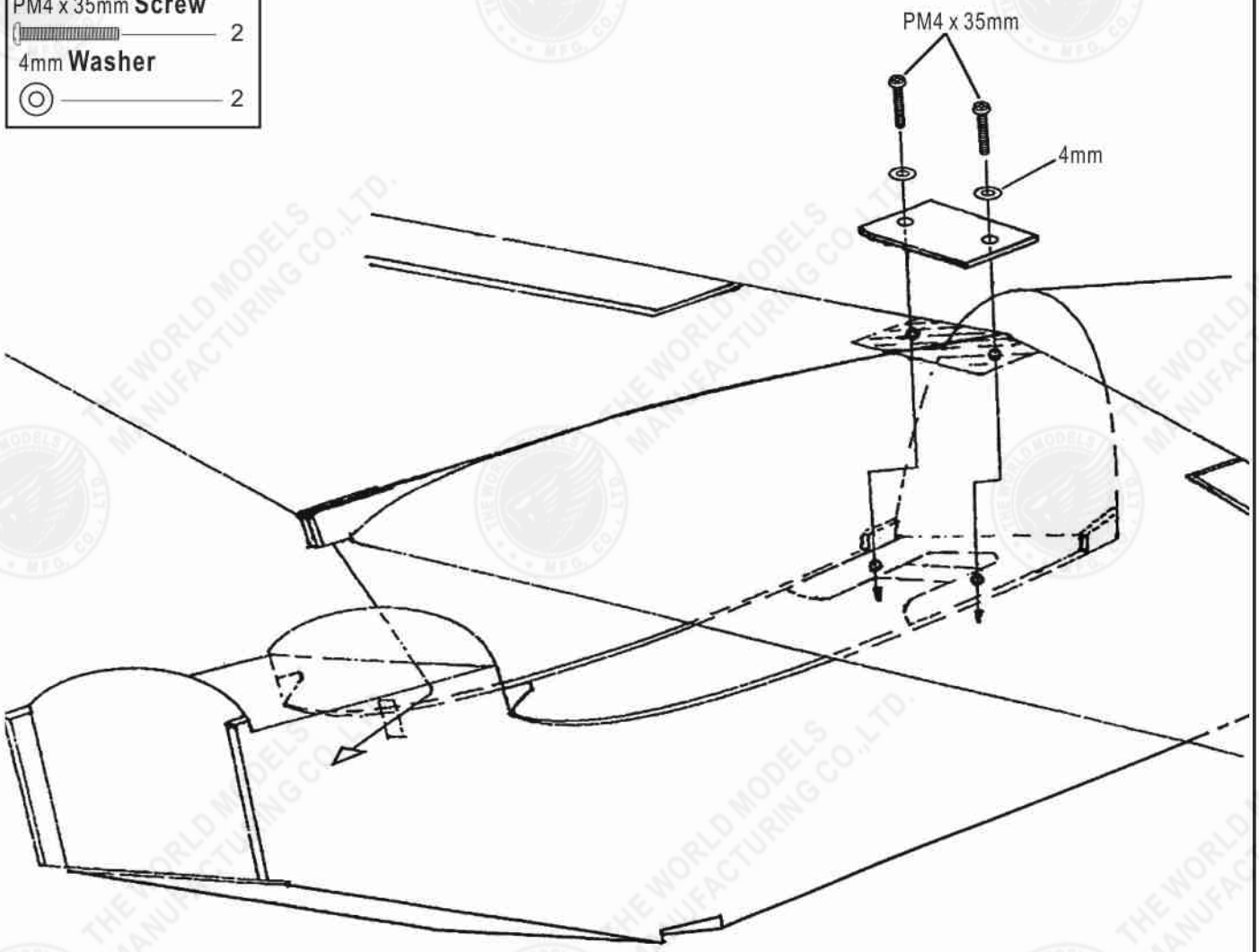

19 Cockpit

PA3 x 8mm **Screw** — 4
3mm **Washer** — 4

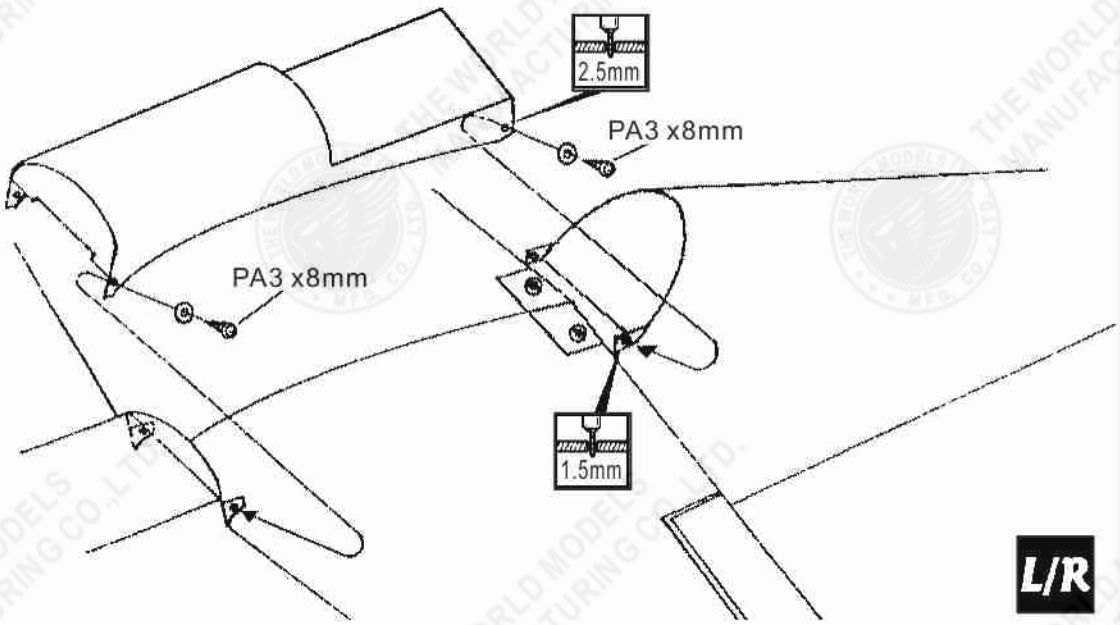

20 Canopy

PWA2.3 X 8mm **Screw** — 4

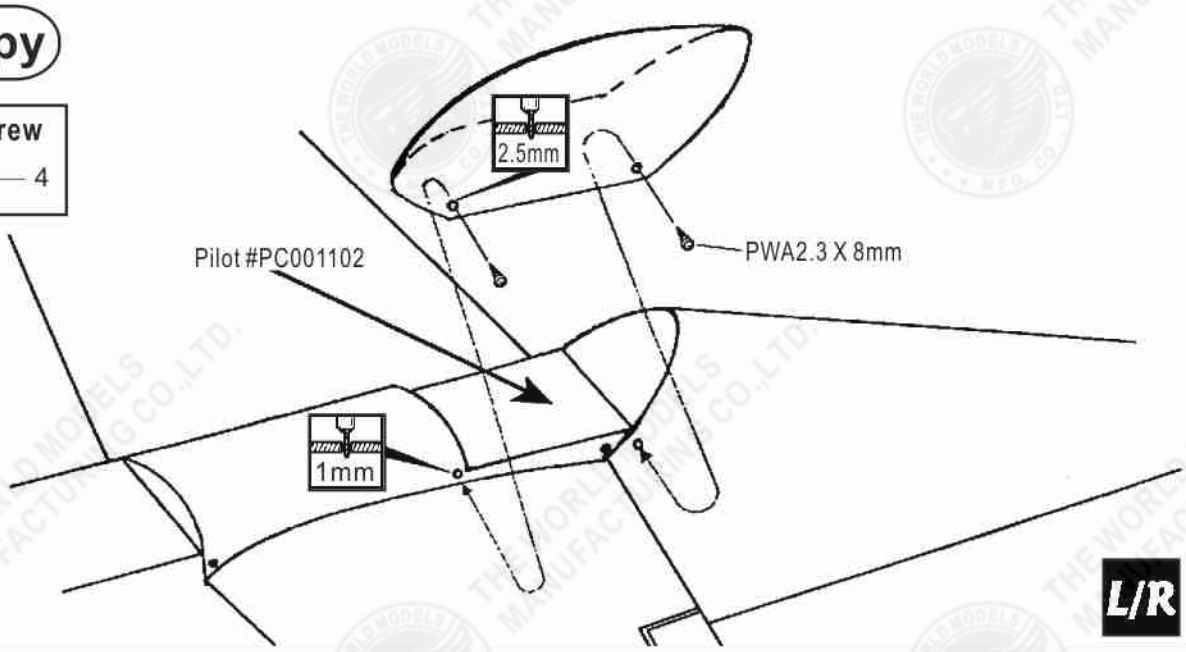

21 Wing Setting

Installation of flying wires is recommdended should you find excessive vibration being transmitted from the engine to the horizontal stabilizer.

Adjust the wing and fuselage configuration as in the diagrams.

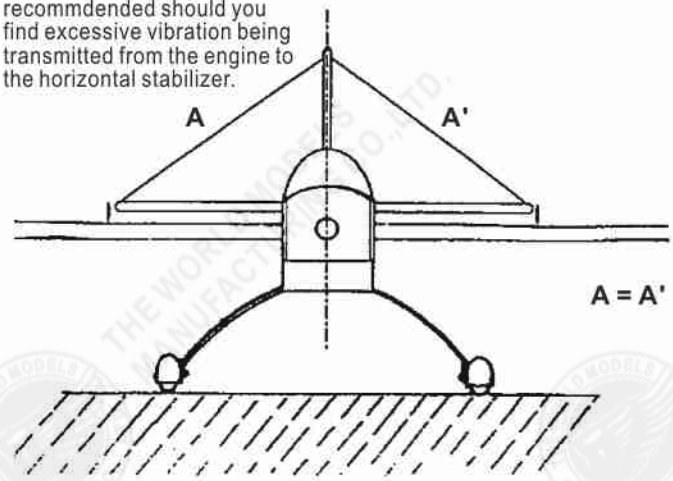

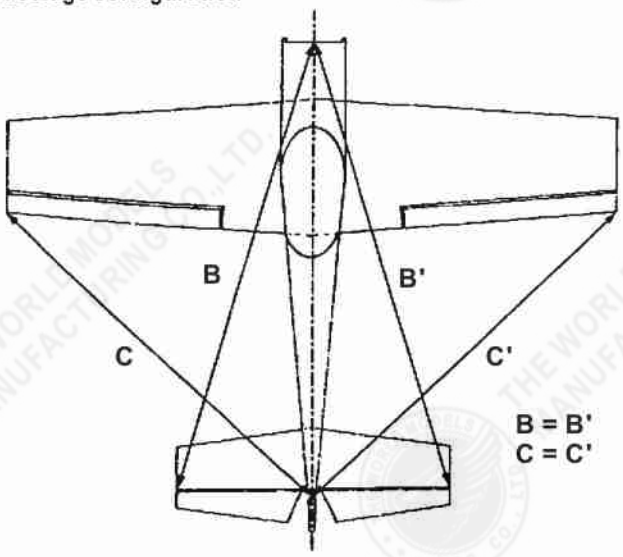

22 Control Throws

Adjust the control throws as shown in the diagram.These throws are good for general flying. You can adjust according to your personal preference.

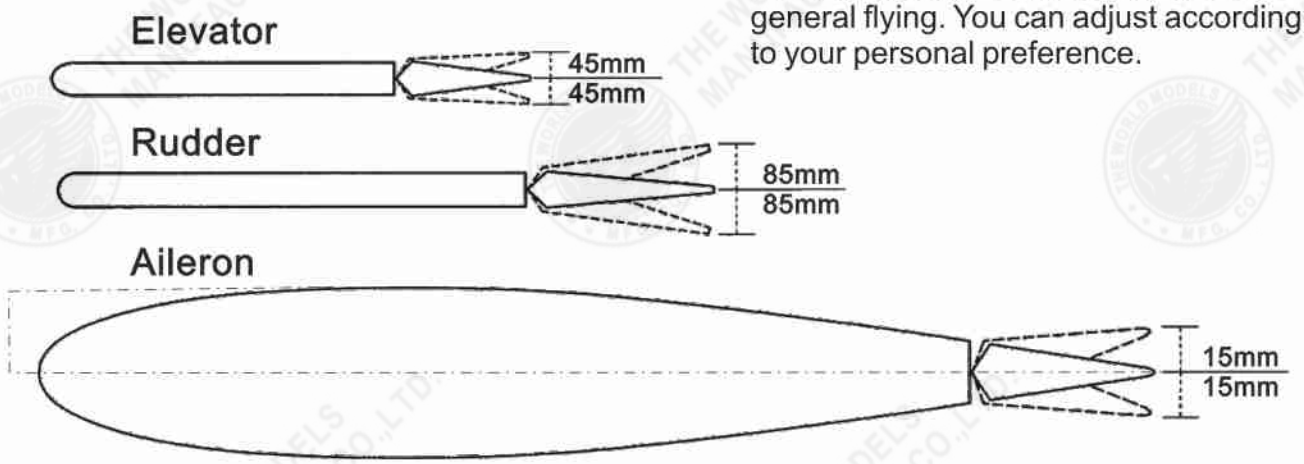

23 C.G.

The ideal C.G. position is **120-130mm** behind the leading edge measured at where the wing meets the fuselage. In order to obtain the C.G. specified, add weight to the fuselage or move the battery position. Check the C.G. before flying.

! Warning!

Important Safety Precautions

#First time flyer should never fly by himself / herself.Assistance from experienced flyer is absolutely necessary.

#Pre-flight adjustment must be done before flying, it is very dangerous to fly a badly pre-adjusted aircraff.

#**EXTRA 300 - 120S** is specially designed to be powered by **4C 1.20** engine, using a more powerful engine does not mean better performance. In fact, over powered engine may cause severe damage and injuries.

#Make sure the air field is spacious, never fly the plane too close to people and never get too close to a running propeller.

#If you find wrinkles on the covering as a result of weather changes, you can use hot iron to remove the wrinkles. Please begin with lower temperature setting and gradually raise the temperature until the wrinkles are gone. Too hot an iron may damage the covering.

#Check and re-tightern up all factory assembled screws, use thread locker if applicable.

Usage of the transparent 3D template

This transparent 3D template is used for position guidance of the actual cutting of the pre-painted cowling.

1

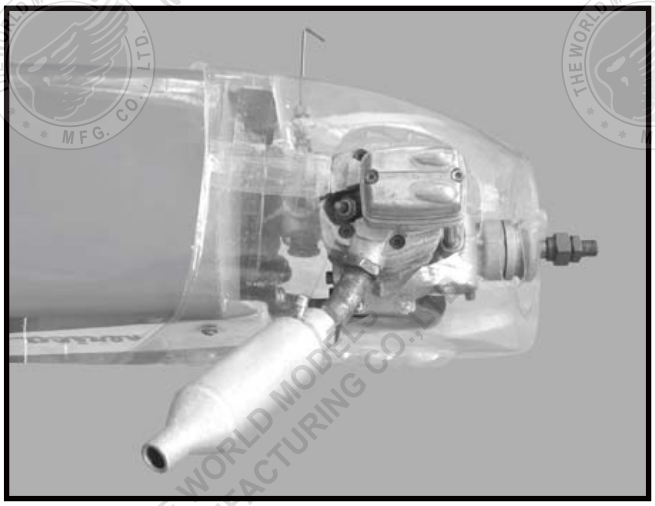

2

3

4

Simply cut the transparent 3D template to fit your engine and exhaust pipe, then slide onto the actual cowling and use as template to mark the openings required for final cutting.